BATHCO DESIGNS

MANAGING BATHROOMS IN CONSTRUCTION

Edwrox Clarity Chrome Exposed Thermostatic Valve, Fixed Head & Slide Rail Kit

67-13017 Edwrox Clarity Chrome Exposed Thermostatic Valve, Fixed Head & Slide Rail Kit

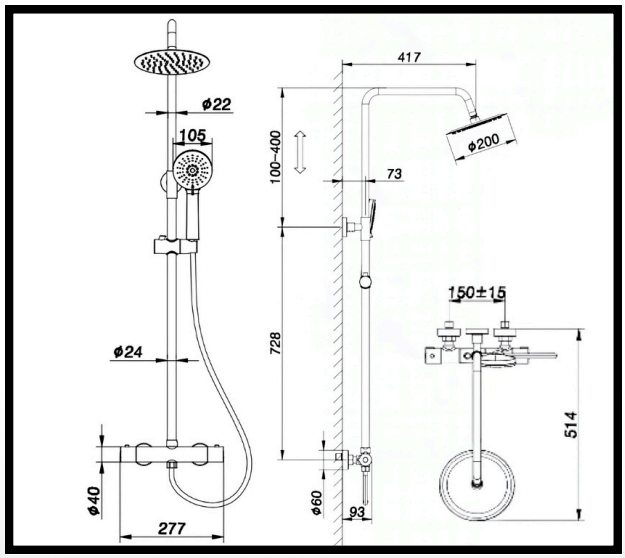

Technical Information

Construction Material: Brass body
Product Weight: 4.3 Kg
COO: CN
Colour / Finish: Chrome
WRAS Approved: Yes
TMV Approved: No
Cartridge Type: Thermostatic
Valve: Ceramic disc valve
Shower Hose: 1.5M, Stainless Steel
Fitting: S-Union connectors (Male thread offset 1/2 inch x 3/4" BSP with Escutcheon)
Water Pressure: Min. 1.0 bar, Max. 6.0 bar

Flow Rates (L/min)

0.1 Bar	0.2 Bar	0.3 Bar	0.5 Bar	1.0 Bar	1.5 Bar	2.0 Bar	3.0 Bar	4.0 Bar	5.0 Bar
4.29	5.64	6.74	8.5	11.8	14.36	16.53	20.19	23.24	26.03

Product Guarantee

- 15 Years Guarantee
- 2 Years Parts

Contact us!

01603 856104
sales@bathcodesigns.com

EDWROX

WRAS APPROVED PRODUCT

The information on this page is accurate as of the issue date. Fitting dimensions are approximate and may vary due to manufacturing tolerances. We reserve the right to change specifications without notice as part of our ongoing product improvement.

Issue Date: 05/03/2025