BATHCO DESIGNS

MANAGING BATHROOMS IN CONSTRUCTION

Edwrox Clarity Gunmetal Exposed Thermostatic Valve, Fixed Head & Slide Rail Kit

67-13017G Edwrox Clarity Gunmetal Exposed Thermostatic Valve, Fixed Head & Slide Rail Kit

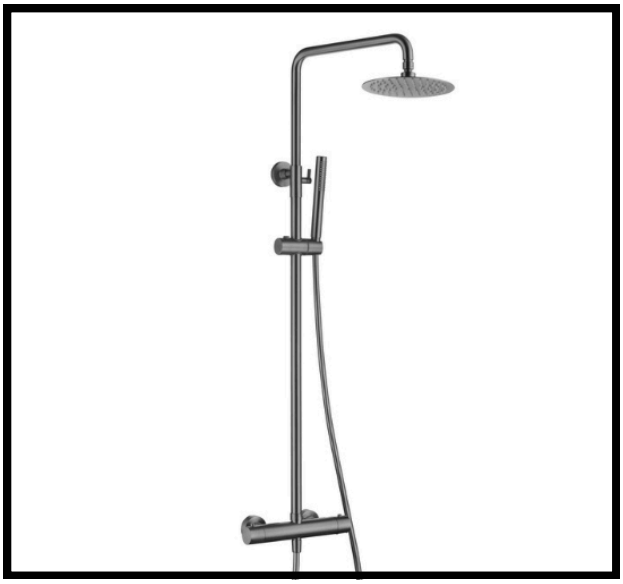

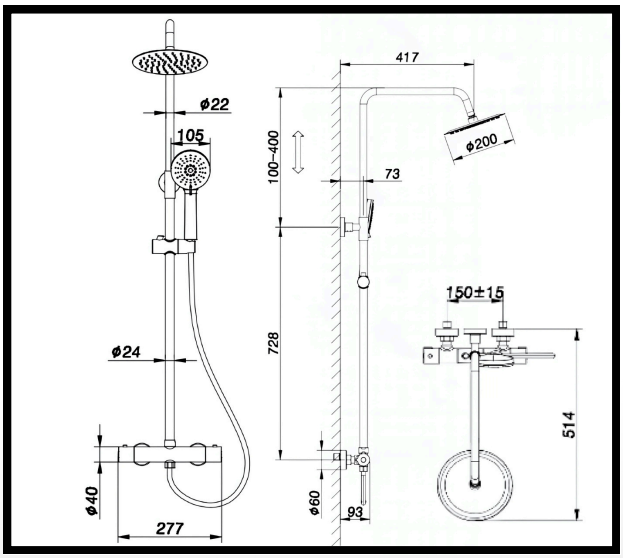

Technical Information

Construction Material: Brass body
Product Weight: 4.88 Kg
COO: CN
Colour / Finish: Gunmetal Gray
WRAS Approved: Yes
TMV Approved: No
Cartridge Type: Thermostatic
Valve: Ceramic disc valve
Shower Hose: 1.5M, PVC
Fitting: Easyfit connectors (Male thread offset 1/2 inch x 3/4" BSP with Escutcheon);
Water Pressure: Min. 1.0 bar, Max. 6.0 bar

Flow Rates (L/min)

0.1 Bar	0.2 Bar	0.3 Bar	0.5 Bar	1.0 Bar	1.5 Bar	2.0 Bar	3.0 Bar	4.0 Bar	5.0 Bar
3.12	5.24	6.35	8.11	12.52	-	17.72	21.63	24.94	27.75

Product Guarantee

- 15 Years Guarantee
- 2 Years Parts

Contact us!

01603 856104

sales@bathcodesigns.com

EDWROX

WRAS APPROVED PRODUCT

The information on this page is accurate as of the issue date. Fitting dimensions are approximate and may vary due to manufacturing tolerances. We reserve the right to change specifications without notice as part of our ongoing product improvement.

Issue Date: 05/03/2025