# BATHCO DESIGNS

MANAGING BATHROOMS IN CONSTRUCTION

## Edwrox Faro Matt Black 4 Hole Deck Mounted Bath Shower Mixer

**1-4022B** Edwrox Faro Matt Black 4 Hole Deck Mounted Bath Shower Mixer

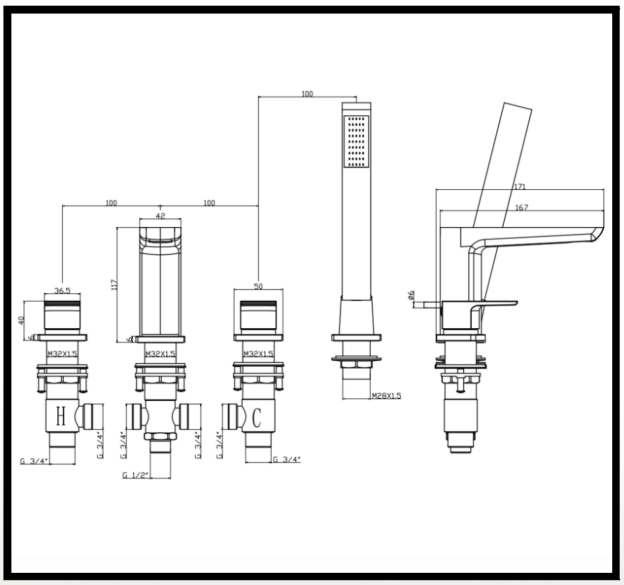

## Technical Information

**Construction Material:** Brass body, Zinc alloy handle
**Product Weight:** 4.5 Kg
**COO:** CN
**Colour / Finish:** Matt Black
**WRAS Approved:** N/A
**RMV Approved:** N/A
**Waste Included:** N/A
**Cartridge Type:** 1/4 Turn 3/4" Ceramic disc valves

## Product Guarantee

- 15 Years Guarantee
- 2 Years Parts

| Flow Rates (L/min) | | | | | | | |
|---|---|---|---|---|---|---|---|
| 0.1 Bar | 0.2 Bar | 0.3 Bar | 0.5 Bar | 1.0 Bar | 1.5 Bar | 2.0 Bar | 3.0 Bar |
| - | 10.6 | - | 14 | 21.8 | 26.5 | 30.8 | 38.1 |

## Contact us!

01603 856104
sales@bathcodesigns.com

EDWROX

The information on this page is accurate as of the issue date. Fitting dimensions are approximate and may vary due to manufacturing tolerances. We reserve the right to change specifications without notice as part of our ongoing product improvement.

Issue Date: 05/03/2025