BATHCO DESIGNS

MANAGING BATHROOMS IN CONSTRUCTION

Edwrox Serie Uno Black Join Bracket

27-UNWRPJOINB Edwrox Serie Uno Black Join Bracket

Technical Information

Material: Aluminum
Colour/finish: Black
COO: CN
Weight: 0.1 Kg
Adjustment (mm): N/A
Aqua-Shield: N/A
Hinge Type: N/A
Frame Type: Frameless
Radius: N/A
Door in Swing: N/A
Door out Swing: N/A
Glass Thickness (mm): N/A
Compliance DOP: N/A

Product Dimensions

H 15.5 x W 53 x D 15.5mm

Product Guarantee

- Lifetime Guarantee
- 2 Years Parts (Rollers, Handle & Seals)

Contact us!

01603 856104

sales@bathcodesigns.com

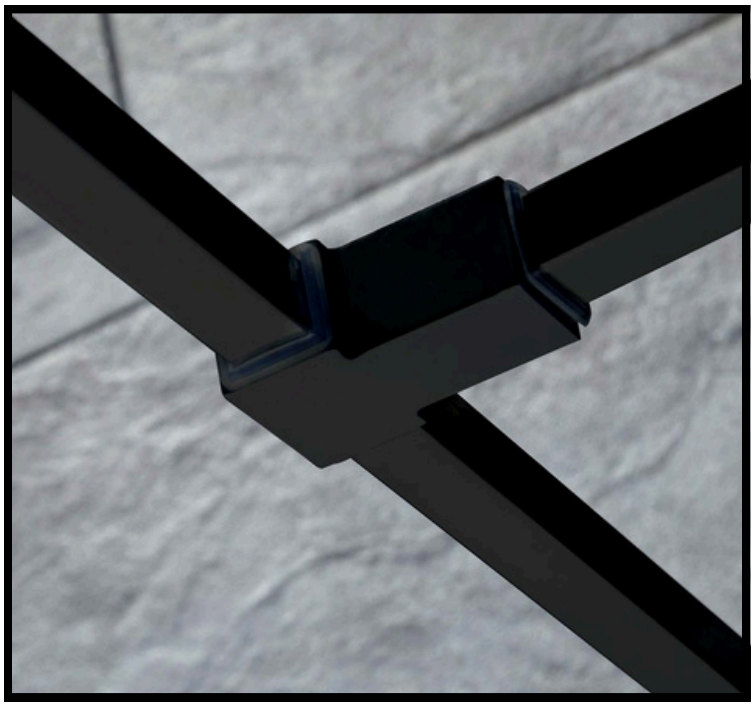

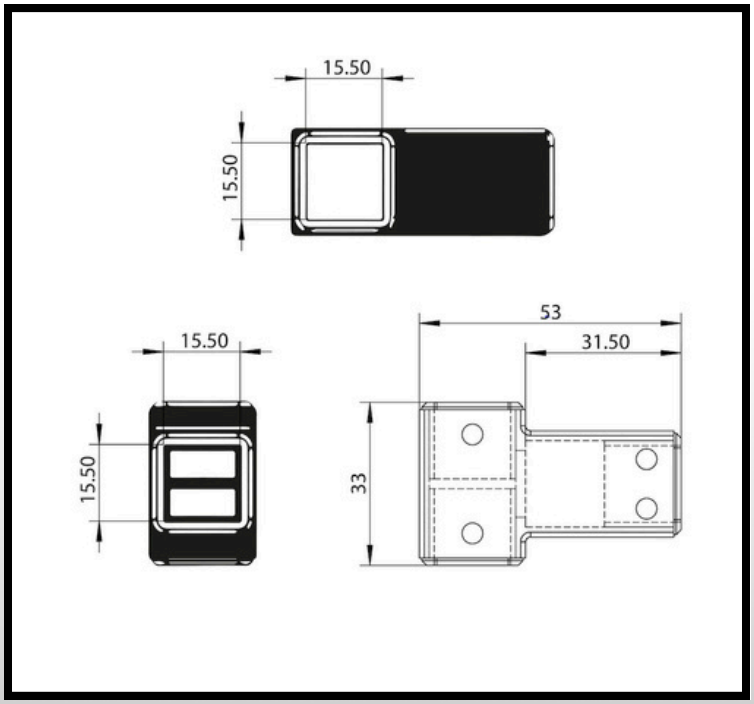

EDWROX

The information on this page is accurate as of the issue date. Fitting dimensions are approximate and may vary due to manufacturing tolerances. We reserve the right to change specifications without notice as part of our ongoing product improvement.

Issue Date: 05/03/2025